HEAT GUN
8006 (F0158006 . .)

INSTRUCTIONS	page 4
使用说明	第 7 页
使用說明	第10 頁
지 침	13페이지
วิธีใช้	หน้า 16
petunjuk	Halaman 18

www.skil-ap.com

SKIL Europe BV - Konijnenberg 60
4825 BD Breda - The Netherlands

12/09

1619PA0398

1

8003

1800
Watt
0,8 kg
EPTA 01/2003
3 settings
570°C
400°C
50°C

2

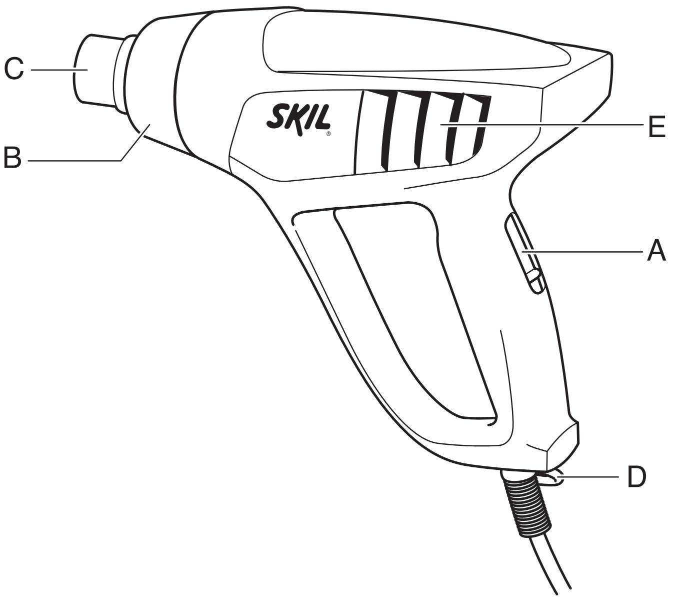
C
B
E
A
D
SKIL

3

4

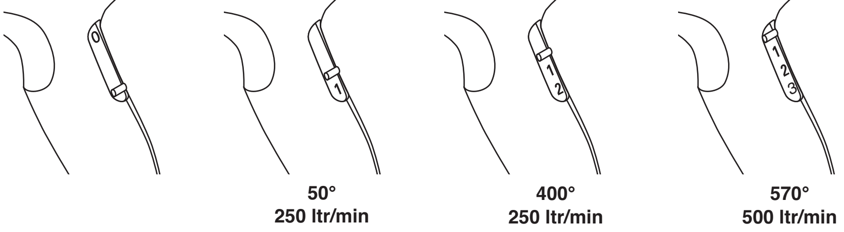
0
1
1
2
1
2
3
50°
250 ltr/min
400°
250 ltr/min
570°
500 ltr/min

5

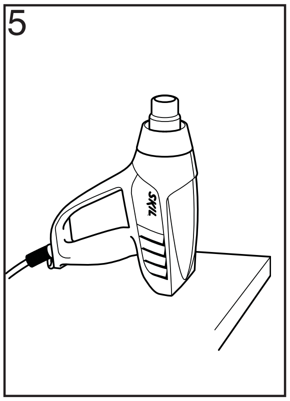

6

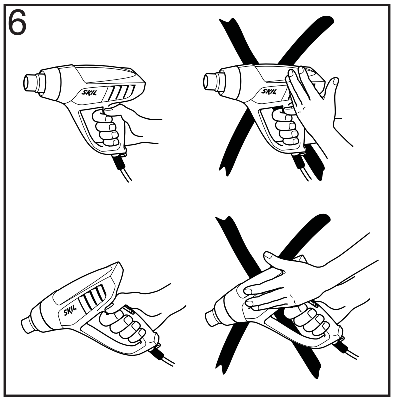

7

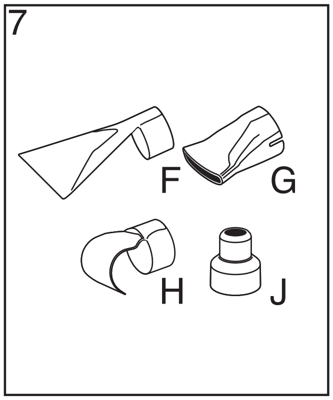

8

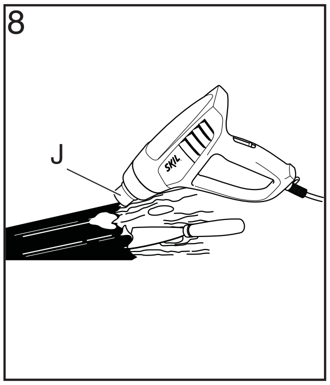

9

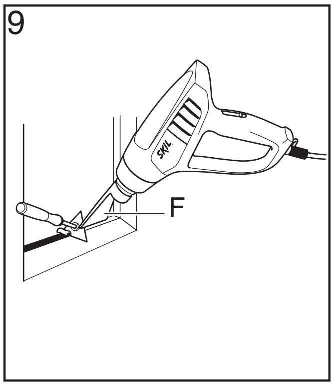

10

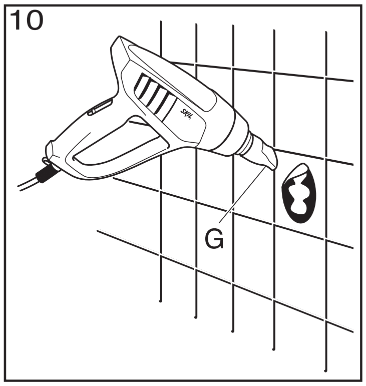

11

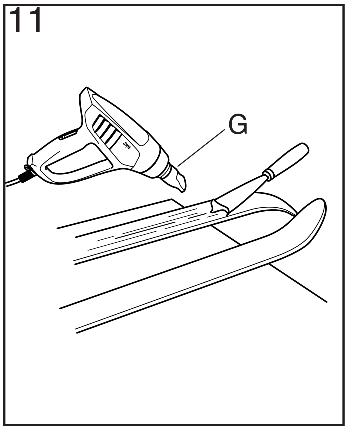

12

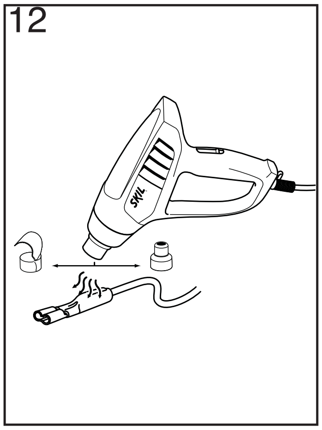

13

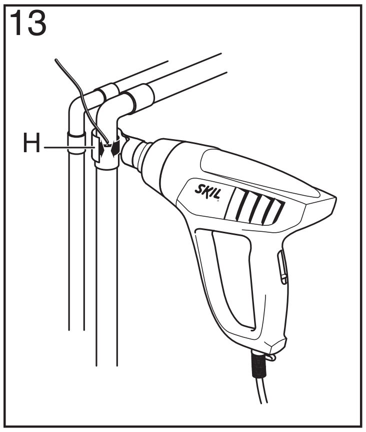

14

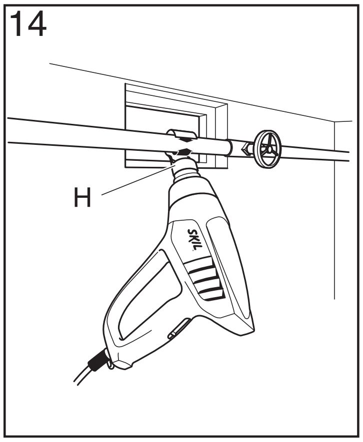

15

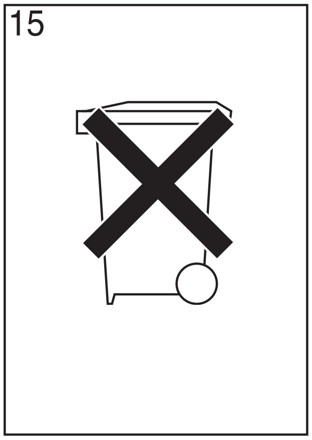

Heatgun 8003

INTRODUCTION

- This tool is intended for the removal of paint, the forming and welding of plastic, and the warming of heat-shrinkable tubing; the tool is also suitable for soldering and tinning, loosening adhesive joints and defrosting water pipes
- Read and save this instruction manual (pay special attention to the safety instructions at the back)

TECHNICAL SPECIFICATIONS ①

SAFETY

BEFORE USE:

- Check the functioning of the tool before each use and, in case of a defect, have it repaired immediately by aqualified person; never open the tool yourself
- Inspect tool cord and plug before each use and, if damaged, have them replaced by a qualified person
- Use completely unrolled and safety extension cords
- Inspect the extension cord periodically and replace it, if damaged
- Only use the original SKIL accessories supplied with the tool
- Use the tool and its accessories in accordance with this instruction manual and in the manner intended for the tool; use of the tool for operations, different from those normally expected to be performed by the tool, could result in a hazardous situation
- This appliance is not intended for use by persons (including children) with reduced physical. Sensory or mental capabilities, or lack of experience and knowledge, unless they have been given supervision or instruction concerning use of the appliance by a person responsible for their safety.
- Children should be supervised to ensure that they do not play with the appliance.
- Always check that the supply voltage is the same as the voltage indicated on the nameplate of the tool
- Be sure tool is switched off when plugging in

DURING USE:

- **Handle the tool with care; prevent fire and burns**
  - do not touch the air outlet/nozzle and the heated object; they become extremely hot
  - do no hold the air outlet/nozzle too close to the object to be worked on
  - do not direct the hot air stream towards the same surface for too long
  - never look down the air outlet/nozzle
  - wear protective gloves and use safety glasses
  - never direct the hot air stream towards persons or animals
  - never use the tool for drying hair
  - do not leave the tool unattended0
  - never use the tool in the proximity of inflammable gases or combustible materials (**risk of explosion**)
  - when working with plastic, paint, varnish and similar materials, inflammable and poisonous gases may be produced; inform yourself beforehand about the materials to be worked on
  - take into account, that heat may be transferred to combustible materials out of eyesight
  - to be on the safe side, have a bucket of water or a fire extinguisher handy, in case any material catches fire
- **Prevent electrical shock**
  - never poke anything down the air outlet/nozzle
  - avoid body contact with earthed surfaces (e.g. pipes, radiators, ranges, refrigerators)
  - ensure the tool does not get wet
  - do not use the tool in damp locations
  - when used outdours, connect the tool via a fault current (FI) circuit breaker with a triggering current of 30 mA maximum, and only use an extension cord which is intended for outdour use and equipped with a splashproof coupling-socket
- **Handle the cord with care**
  - always keep away the cord from the hot air stream and the air outlet/nozzle
  - keep the cord away from heat, oil and sharp edges
  - do not carry the tool by the cord, and do not yank the cord to disconnect it from the socket
  - do not suspend the tool by the cord
- Never use the tool in conjunction with chemical solvents
- Make sure work area is adequately ventilated
- Keep work area clean and well lit
- Keep children away from work area
- Stay alert; watch what you are doing, use common sense and do not operate the tool when you are tired
- Take a secure stance; do not overreach, especially on ladders and stages
- Ensure that the tool is switched off, before putting it aside
- In case of electrical or mechanical malfunction, immediately switch off the tool and disconnect the plug

AFTER USE:

- Switch off the tool and disconnect the plug
- Suspend the tool on hanging ring D② or set it down on its rear in an upright position; when doing so, make sure no combustible materials or inflammable gases are in the proximity
- Allow the tool to cool down for at least 30 minutes before storage
- Store the tool in a dry and locked-up place, out of reach of children

USE

- On/off switch with 3 temperature settings③
  - ! **check if switch A② is in position "0" before plugging in**
  - switch on the tool by pushing switch A in desired position:
    1 = 50°C, air stream 250 litres/minute
    2 = 400°C, air stream 250 litres/minute
    3 = 570°C, air stream 500 litres/minute
  - when using it for the first time, some smoke may emit from the tool; this is normal and will soon cease
  - switch off the tool by pushing switch A in position "0"
- General use
  - determine the right temperature by testing out on an inconspicuous part of the workpiece; start with a low temperature setting
  - the temperature falls as the distance between the air outlet/nozzle and the workpiece increases
  - the temperature required depends on the material to be worked on
- Stationary use④
  - set the tool down on its rear in an upright position
  - make sure the surface is clean and dustfree; polluted air damages the motor
  - make sure the air stream is directed away from you
  - secure the cord to prevent pulling down the tool

- do not touch the air outlet
- made sure nothing drops into the air outlet
- carefully hold the tool with one hand while switching it off with the other hand, and then allow it to cool down
- **WARNING: Switch off the tool before the tool with it's accessories is put on it's stand position. Because the tool with accessories may overturn and fire hazard will happen.**

- Use at hard-to-reach places
  - remove ring B ② thus releasing the metal air outlet over a greater distance
  - ! **pay attention to increased risk of fire and burns**
- Holding and guiding the tool ⑤
  - hold the tool with one hand
  - keep ventilation slots E ② uncovered
- Standard accessories ⑥
  - glass protection nozzle F (for deflecting air stream)
  - flat nozzle G (for broadening air stream)
  - reflector nozzle H (for reflecting air stream)
  - reduction nozzle J (for concentrating air stream)

  All application examples (**except removing paint next to glass**) can be performed without accessories; however, using the appropriate accessory simplifies the work and significantly improves the quality of the results
- Mounting/removing accessories
  - simply fit the accessory onto air outlet C ②
  - remove an accessory by pulling it off to the front after it has cooled down
  - ! **mount an accessory only when the air outlet is cold, when the switch is in position "0" and when the plug is disconnected**
- Constant heat control (overload protection)

  Protects heating element from damage when tool is overloaded without having to stop it and/or let it cool down for a period of time
  - when the temperature gets too high, the heating element switches itself off, while the motor continues to run and produces cold air
  - when the temperature has fallen down sufficiently (taking only a few seconds), the heating element will be switched on automatically

APPLICATION ADVICE

- Removing paint/lacquer ⑦
  - use a clean, sharp scraper
  - scrape firmly, when the paint softens
  - experiment to establish the length of time necessary to apply the heat for optimal results
  - scrape the softened paint immediately, or it will harden again
  - keep a 30° to 40° angle between the tool and the workpiece
  - remove paint and debris immediately from the scraper to prevent them from ignition
  - scrape with the grain of the wood, wherever possible
  - do not direct the hot air stream towards the same surface for too long
  - dispose of all paint debris safely
  - thoroughly clean the work area after completing the job
  - ! **be careful when removing layers of paint in old buildings; in the past the building may have been painted with paint containing lead, which is highly poisonous**
  - ! **exposure to even low levels of lead can cause serious brain and nervous system damage; young and unborn children are particularly vulnerable**
  - ! **have lead-based paint removed by a professional without using a heatgun**

  OTHER APPLICATION EXAMPLE:

  ★ removing (synthetic) wall covering
- Removing paint/lacquer next to glass ⑧
  - **always** use glass protection nozzle F when working next to glass
  - remove the paint with a hand scraper
  - ! **do not use the tool for removing paint on metal-framed windows; metal is heat-conducting which might lead to breaking of the glass**
- Removing stickers (use flat nozzle G) ⑨
  - many adhesives become softer when heated, allowing adhesive bonds to be separated and superfluous adhesive to be removed
  - ! **heat sticker on the upper side**
  - ! **always take care not to overheat the underlying surface**

  OTHER APPLICATION EXAMPLES:

  ★ removing linoleum and vinyl carpeting
  ★ removing carpet tiles made of synthetic fibres
  ★ removing veneers/applying veneer strips
  ★ softening/melting tar, tin, bitumen, wax (use flat nozzle G)
  ★ waxing (skis, furniture) (use flat nozzle G) ⑩
  ★ removing resin
  ★ loosening rusty/too tightly fastened metal screws, nuts and bolts
  ★ removing candle wax (**do not overheat the underlying surface**)
  ★ repairing broken candles/restoring bent candles to their original shape
- Shrink fitting ⑪
  - use reflector nozzle H or reduction nozzle J
  - select a shrink-fit tube with a diameter matching that of the workpiece
  - heat the shrink-fit tube evenly

  OTHER APPLICATION EXAMPLE:

  ★ shrink-wrapping
- Soldering water pipes ⑫

  This tool is most suitable for working with soft solders (melting point below 400°)
  - use reflector nozzle H
  - thoroughly clean both joining sections before soldering
  - pre-heat both sections and apply soldering wire (**do not use lead-based soldering wire**)

  OTHER APPLICATION EXAMPLES:

  ★ de-soldering of integrated circuits and other electronic components (use reduction nozzle J)
  ★ releasing old soldered joints (use reduction nozzle J)
- Thawing out frozen water pipes ⑬
  - use reflector nozzle H
  - heat the frozen area evenly
  - ! **do no thaw out water pipes made of PVC**
  - ! **water pipes are often difficult to distinguish from gas pipes; heating gas pipes is extremely dangerous – risk of explosion**

  OTHER APPLICATION EXAMPLES:

  ★ thawing out frozen car locks (use reduction nozzle J)
  ★ defrosting freezers (**do not damage the plastic housing**)
  ★ thawing out ice-covered steps and pavements

- Shaping plastic tubes
  - use reflector nozzle H
  - fill the tube with sand and seal it at both ends, to avoid kinking of the tube
  - heat the tube evenly by moving it from side to side

  OTHER APPLICATION EXAMPLES:
  - ★ shaping all plastics with a low melting-point (polyethylene, PVC etc.)
  - ★ shaping all plastics with a high melting-point (acrylic glass, Plexiglas etc.)
  - ★ shaping and bending carpet tiles made of synthetic fibres
  - ★ shaping and bending of wood (model-building)
- Welding plastics
  - the weld seam must be clean and grease-free
  - keep welding rod close to weld seam and apply heat, until the welding rod gets tacky
  - remove heat, when weld seam is filled up

  OTHER APPLICATION EXAMPLES:
  - ★ repairing of surfboards, skis and other synthetic sports goods (use flat nozzle G)
  - ★ welding PVC-materials
  - ★ smoothening blisters after sticking PVC-labels
  - ★ connecting garden hoses (use reflector nozzle H)
- Drying
  - ! **only dry with a low or medium temperature setting (position 1 or 2) and with an increased distance between the tool and the workpiece**
  - ★ drying of paint, varnish, gypsum, mortar and plaster
  - ★ drying wet timber prior to filling
  - ★ drying thickly applied filler or adhesive quickly
  - ★ drying building joints before spraying insulation or sealant
  - ★ drying joints and cracks in boatbuilding
- Cleaning/disinfecting
  - ★ disinfecting rabbit hutches, dove cotes, etc. (**remove your pet first**)
  - ★ combatting ant colonies
  - ★ combatting woodworms and boring beetles (**hold the tool at an adequate distance from the wood**)
  - ★ eliminating weeds
- Igniting
  - ★ igniting charcoal (barbecues)
  - ★ setting fire to wood (open fires)

GUARANTEE / ENVIRONMENT

- Always keep tool and cord clean (especially the ventilation slots E ②)
  - ! **disconnect the plug before cleaning**
- Never use easy inflammable liquids for cleaning the heat gun in general and the air outlet/nozzle in particular)
- This SKIL product is guaranteed in accordance with statutory/country-specific regulations; damage due to normal wear and tear, overload or improper handling will be excluded from the guarantee
- In case of a complaint, send the tool **undismantled** together with proof of purchase to your dealer or the nearest SKIL service station
- Dispose of the tool by sorting tool, accessories and packaging for environment-friendly recycling (the plastic components are labeled for categorized recycling)

SAFETY INSTRUCTIONS

When using electric tools, the following basic safety precautions should always be followed to reduce the risk of fire, electric shock and personal injury. **Read all these instructions before attempting to operate this product. Save these instructions.**

1 **Check voltage indicated on nameplate**

2 **Keep work area clean**
Cluttered areas and benches invite injuries.

3 **Consider work area environment**
Do not expose power tools to rain.
Do not use power tools in damp or wet locations.
Keep work area well lit.
Do not use power tools in presence of flammable liquids or gasses.

4 **Guard against electric shock**
Avoid body contact with earthed surfaces (e.g. pipes, radiators, ranges, refrigerators).

5 **Keep children away**
Do not let visitors contact tool or cord; they should be kept away from work area.

6 **Store idle tools**
When not in use, tools should be stored in a dry and locked-up place, out of reach of children.

7 **Do not force the tool**
It will do the job better and safer at the rate for which it was intended.

8 **Use the right tool**
Do not force small tools or attachments to do the job of a heavy-duty tool.
Do not use tools for purposes not intended (e.g. do not use a circular saw for cutting tree limbs or logs).

9 **Dress properly**
Do not wear loose clothing or jewelry; they can be caught in moving parts. Rubber gloves and non-skid footwear are recommended when working outdoors. Wear protective hair covering to contain long hair.

10 **Use safety glasses**
Also use face or dust mask, if cutting operation is dusty.

11 **Connect dust extraction equipment**
If devices are provided for the connection of dust extraction and collection facilities, ensure these are connected and properly used.

12 **Do not abuse the cord**
Never carry the tool by the cord, never yank the cord to disconnect it from the socket, and keep the cord away from heat, oil and sharp edges.

13 **Secure work**
Use clamps or a vise to hold the work; it is safer than using your hand and it frees both hands to operate the tool.

14 **Do not overreach**
Keep proper footing and balance at all times.

15 **Maintain tools with care**
Keep tools sharp and clean for better and safer performance. Follow instructions for maintenance and changing accessories. Inspect tool cords and plugs periodically and, if damaged, have them repaired by a qualified person. Inspect extension cords periodically and replace them, if damaged. Keep handles dry, clean and free from oil and grease.

16 **Disconnect tools**
Disconnect tool when not in use, before servicing, or when changing accessories such as blades, bits and cutters.

17 **Remove tool keys**
Form the habit of checking to see that keys and adjusting wrenches are removed from the tool before turning it on.

18 **Avoid unintentional starting**
Do not carry a plugged-in tool with a finger on the switch. Be sure the switch is off when plugging in.

19 **Outdoor use extension cords**
When tool is used outdoors, use only extension cords intended for use outdoors and so marked.

20 **Stay alert**
Watch what you are doing, use common sense and do not operate tool when you are tired.

21 **Check damaged parts**
Before you use the tool, always carefully check the guarding and other parts to determine that they will operate properly and perform their intended functions. Check for alignment of moving parts, binding of moving parts and breakage of parts. Check for proper mounting of all parts and any other conditions that may affect their operation. A guard, switch or other part that is damaged or defective should be properly repaired or replaced by a qualified person. Do not use tool, if switch does not turn it on and off.

22 **Warning!** Use the tool and its accessories in accordance with these safety instructions and in the manner intended for the particular tool, taking into account the working conditions and the work to be performed. Use of the tool for operations, different from those normally expected to be performed by the particular tool, could result in a hazardous situation.

23 **Have the tool repaired by a qualified person**
This electric tool is in accordance with the relevant safety rules. Repairs should only be carried out by qualified persons using original spare parts, otherwise this may result in considerable danger for the user.

热风枪 8003

产品简介

- 本工具用于油漆清除、塑料成型和粘接以及热收缩管的加热；本工具也适用于热焊接和镀锡、熔断粘合接头和解冻水管
- 请阅读并妥善保存本说明手册（尤其要注意封底的安全说明）

技术规格 (1)

安全

使用前：

- 每次使用前，请检查工具是否工作正常，如有故障，请立即找专业维修人员修理；切勿自行拆开工具
- 每次使用前，请检查工具电源线和插头，如有损坏，应由专业维修人员更换
- 要使用完全展开的安全延长接线
- 要定期检查延长接线，如有损坏，请更换
- 仅使用本工具附带的原装 SKIL 配件
- 应遵照本说明手册的说明使用工具及其配件，并按照规定的方法使用；超出正常规定范围使用工具可能会造成危险
- 年龄未满 16 周岁者不宜使用本工具
- 务必要检查电源电压与工具铭牌上标称的额定电压是否相同
- 插接电源时，要确保工具电源开关关闭

使用时：

- **小心操作工具；防止引起火灾和灼伤**
  - 不要接触气流出口/喷嘴和被加热的物体；加热时这些部位温度会非常高
  - 气流出口/喷嘴不要距离作业物体太近
  - 不要将热气流长时间直接对着同一表面位置吹
  - 切勿通过气流出口/喷嘴观察工具内部
  - 请戴上防护手套并使用护目镜
  - 切勿将热气流直接对准人或动物
  - 切勿使用本工具吹干头发
  - 不要随意放置工具，使其处于无人管理状态
  - 切勿在易燃气体或物质附近使用本工具（**有发生爆炸的危险**）
  - 在处理塑料、油漆、清漆和类似物质时，可能会产生易燃和有毒气体；应事先了解要处理的物质
  - 请注意，热量可以传导给肉眼看不到的易燃物质
  - 为安全起见，要在附近放置一桶水或一个灭火器，以防有任何物质起火
- **防止触电**
  - 切勿将任何物体插入气流出口/喷嘴
  - 要避免身体接触接地物体（如管道、散热器、多功能炉灶和冰箱）表面
  - 切记保持工具干燥
  - 不要在潮湿的场所使用本工具
  - 在户外使用时，要在工具与电源之间连接一个最大触发电流为 30 mA 的故障电流 (FI) 电路断路器。并且，仅使用配备防水耦合插座的户外专用延长接线
- **小心布放电源线**
  - 电源线必须始终远离热气流和气流出口/喷嘴
  - 电源线要远离热源、油污和尖锐物体
  - 不要通过提拉电源线携带工具，从插座上拔下电源线时不要用力拽
  - 不要借助电源线悬挂工具
- 使用本工具时，切勿同时使用化学溶剂
- 确保工作区域通风良好
- 保持工作区域清洁明亮
- 儿童应远离工作区域
- 保持警惕；工作时要集中注意力，运用基本常识，不要在疲倦时操作工具
- 注意安全；身体不要探出太远，尤其是在梯子和台子上操作时
- 在收起工具之前，要确保工具电源开关关闭
- 如有电动或机械故障，要立即关闭工具电源并拔掉插头

使用后：

- 关闭工具电源并拔掉插头
- 将工具悬挂在吊环 D (2)上或尾部朝下直立放置；放置时，要确保附近没有易燃物质或易燃气体
- 存放之前，应让工具至少冷却 30 分钟
- 将工具存放在干燥、加锁且儿童接触不到的地方

使用方法

- On/off 开关有 3 个温度档位 (2)

  ! 插接电源前，请检查开关 A (2) **是否处于“0”档位**
  - 将开关 A 推至所需的档位打开工具电源：

    1 = 50℃，空气流量 250 升/分钟

    2 = 400℃，空气流量 250 升/分钟

    3 = 570℃，空气流量 500 升/分钟
  - 第一次使用工具时，工具内可能会冒出一些烟；这属于正常现象并且很快就会消失
  - 将开关 A 推至“0”档位关闭工具电源
- 一般用法
  - 先在工件不重要的位置上试一下，确定合适的温度；从低温档位开始
  - 随着气流出口/喷嘴和工件之间距离的增大，温度逐渐降低
  - 所需温度的高低取决于要加工的材料类型
- 固定使用 (4)
  - 将工具尾部朝下直立放置
  - 确保物体表面清洁无尘；污染的空气会损坏电机
  - 确保气流方向避开自己
  - 固定电源线，以防拉动工具

- 不要接触气流出口/喷嘴
- 切勿让任何物体掉入气流出口/喷嘴
- 用一只手小心握住工具，另一只手关闭电源，然后让其自然冷却

● 在不易触及的地方使用
- 取下环 B (2)，加长金属气流出口

！ 注意，这样会增加引起火灾和灼伤的风险

● 握住工具，将其对准目标 (5)
- 用一只手握住工具
- 打开通风槽口 E (2)

● 标准配件 (6)
- 玻璃防护喷嘴 F（用于偏转气流）
- 平头喷嘴 G（用于加宽气流）
- 反射喷嘴 H（用于反射气流）
- 收口喷嘴 J（用于集中气流）

无需使用配件即可以完成所有范例应用操作（**清除玻璃旁的油漆除外**）；不过，使用适当的配件可以简化工作，并可以大大提高工作质量

● 安装/拆除配件
- 只需将配件直接安装到气流出口 C (2) 上即可
- 待配件冷却后，向前拉出配件

！ 只有在气流出口冷却、开关处于“0”档位且已拔掉插头时，才能安装配件

● 恒温控制（过载保护）

在工具过载时保护加热元件，防止其损坏而无需关闭工具电源和/或让工具冷却一段时间
- 在温度过高时，加热元件会自动停止加热，同时电机继续运转并吹出冷空气
- 在温度降至足够低时（只需几秒钟），加热元件会自动开始加热

应用建议

● 清除油漆/漆 (7)
- 使用干净、锋利的刮刀
- 在油漆软化时用力刮
- 反复试验，确定所需的加热时间，以取得最佳效果
- 立即刮除软化的油漆，否则油漆会重新硬化
- 使工具与工件之间保持 30° 至 40° 的角度
- 立即清除刮刀上的油漆和碎片，以防起火
- 如有可能，请使用木屑刮擦
- 不要将热气流长时间直接对着同一表面位置吹
- 妥善处理所有油漆碎片
- 工作完成后，彻底清洁工作区域

！ 清除旧建筑内的油漆层时务必小心；以前的建筑上可能涂有含铅的油漆，铅属于剧毒物质

！ 即使接触少量的铅，也可能会导致严重的大脑和神经系统损伤；儿童和胎儿特别容易受到伤害

！ 含铅油漆必须由专业人员清除，不能使用热风枪

其他应用范例：

★ 清除（合成）墙面涂料

● 清除玻璃旁的油漆/漆 (8)
- 靠近玻璃工作时，**务必**要使用玻璃防护喷嘴 F
- 用手动刮刀清除油漆

！ 不要使用本工具清除金属框架窗户上的油漆；因为金属导热，可能会导致玻璃破裂

● 清除粘贴物（使用平头喷嘴 G）(9)
- 很多粘贴物在加热时会变软，胶接脱离，我们可通过这种方式将粘贴物清除

！ 从上面加热粘贴物

！ 务必小心，不要过度加热其下表面

其他应用范例：

★ 清除油布和乙烯基地毯
★ 清除合成纤维地毯块
★ 清除装饰板/粘接装饰板条
★ 软化/熔化焦油、锡、沥青和蜡（使用平头喷嘴 G）
★ 上蜡（雪橇和家具）（使用平头喷嘴 G）(10)
★ 清除树脂
★ 松脱生锈/拧得过紧的金属螺钉、螺母和螺栓
★ 清除蜡烛蜡渍（**不要过度加热下表面**）
★ 粘接折断的蜡烛/使弯曲的蜡烛恢复原状

● 收缩固定件 (11)
- 使用反射喷头 H 或收口喷头 J
- 选择直径符合工件尺寸的收缩固定管
- 均匀加热收缩固定管

其他应用范例：

★ 缩包

● 焊接水管 (12)

本工具最适用于处理软焊料（熔点低于 400°）
- 使用反射喷嘴 H
- 焊接前，要彻底清洁要连接的部位
- 预热两部分焊接件然后使用焊条焊接（**不要使用含铅焊条**）

其他应用范例：

★ 切割集成电路和其他电子部件（使用收口喷嘴 J）
★ 清除旧焊点（使用缩口喷嘴 J）

● 解冻冻住的水管 (13)
- 使用反射喷嘴 H
- 均匀加热冻住的部分

！ 不用于解冻 PVC 水管

！ 水管与煤气管常常很难区分；加热煤气管极其危险

一 有发生爆炸的风险

其他应用范例：

★ 解冻冻住的车锁（使用收口喷嘴 J）
★ 冰箱除霜（**不要损坏塑料冷藏室**）
★ 台阶和人行道除冰

- 塑料管成型
  - 使用反射喷嘴 H
  - 在塑料管内填入沙子并将两端封住，以免其扭曲变形
  - 左右移动管子使其受热均匀

  其他应用范例：

  ★ 各种低熔点塑料成型（聚乙烯和 PVC 等）
  ★ 各种高熔点塑料成型（丙烯酸玻璃和树脂玻璃等）
  ★ 合成纤维地毯块成型和弯曲
  ★ 木材成型和弯曲（制模）
- 焊接塑料
  - 焊缝必须清洁无油污
  - 使焊条靠近焊缝并加热，直至焊条熔化
  - 焊缝填满后停止加热

  其他应用范例：

  ★ 修补冲浪板、滑雪板和其他合成运动用品（使用平头喷嘴 G）
  ★ 焊接 PVC 材料
  ★ 烫平在贴上 PVC 标签后出现的气泡
  ★ 连接橡胶软管（使用反射喷嘴 H）
- 烘干

  ！只能使用低温或中温档位（档位 1 或 2）烘干，而且要增大工具与工件之间的距离

  ★ 烘干油漆、清漆、石膏、水浆和灰泥
  ★ 填充前烘干湿木料
  ★ 快速烘干厚填充物或粘胶
  ★ 喷绝缘剂和密封剂之前烘干建筑物连接部位
  ★ 在造船时烘干连接部位和裂缝
- 清洁/消毒

  ★ 为兔箱、鸽舍等消毒（**请先抱走您的宠物**）
  ★ 驱赶蚁群
  ★ 杀灭木蛀虫和钻木甲虫（**工具与木头要保持一定的距离**）
  ★ 除草
- 点火

★ 点燃木炭（烧烤）
★ 点燃木头（篝火）

担保/环境

- 保持工具和电源线清洁（尤其是通风槽口 E ②）

  ！清洁前拔掉电源插头
- 一般情况下，切勿使用易燃液体清洁热风枪，特别是气流出口/喷嘴）
- 我们按照相应国家的法律或法规对本 SKIL 产品进行担保；由于正常磨损、过载或使用不当所造成的损坏不属于本担保服务的范围
- 如果对产品不满意，请将**未经拆卸**的工具连同购买票据一起送到经销商或最近的 SKIL 服务点
- 工具废弃时，请分类处理工具、配件和包装，以保护环境和回收利用（塑料部件标有分类回收利用的标签）

安全指示

当使用电动工具时，应一直遵守下列的安全预防措施以降低火灾，电击和个人伤害的风险。**在操作此产品之前请仔细阅读所有的说明书并妥善保存这些说明书**。

1 **请核对铭牌上的电压**

2 **保持工作区的清洁**
杂乱的工作区和工作台可引起伤害

3 **考虑工作区的环境**
请勿将电动工具暴露于雨中
请勿在潮湿和湿润之处使用电动工具
保持工作区的光线充足
请勿在有易燃液体和气体的场合使用电动工具

4 **提防电击**
避免身体与接地的表面接触（例如，导管、散热器、炉灶和电冰箱）

5 **远离孩子**
请勿让参观者接触工具或电线，他们应远离工作区

6 **贮藏闭置的工具**
当使用本工具时，请将它贮藏在干燥的并可锁住的地方，以使孩子接触不到

7 **请勿强迫工具**
在所预期的速度内，它将更好地和更安全地工作

8 **使用正确的工具**
请勿强迫小工具或附件去做重型工作。请勿将工具用于它未曾被设计的用途（例如，请勿使用圆锯去切割树枝和原木）

9 **适当穿着**
请勿穿着宽松的衣服和佩带珠宝首饰：他们可被移动的部件勾住
在户外工作时，我们建议您带上橡胶手套和穿上防滑鞋，请带上防护头罩以束起长发

10 **使用安全眼镜**
若切割工作时有很多灰尘，也可使用面具和防尘面罩

11 **连接吸尘设备**
若已提供吸取和收集灰尘的设备，请确信它们已被连接并能正确地使用

12 **请勿滥用电线**
决不可拉着电线提起工具，决不可猛拉电线以将它从插座上断开，请让电线远离热源，油和锐利地边缘

13 **保护工作**
使用夹钳和老虎钳握住工件，这比您用手握住更安全。它可让您双手操作工具

14 **请勿延伸过远**
请始终保持适当的步调和平衡。

15 **仔细保养工具**
为更好地和更安全地工作，保持工具锐利和干净。请遵循保养和更换配件的指示。定期检查工具和插头，如果有所损坏，请让具有资格的人维修它。请定期检查扩展电线，若有损坏时，请更换它。保持把手干燥、清洁、无油渍和润滑油。

16 **断开工具**
不使用时，维修前，或者更换部件如刀片，钻头和刀具时请断开工具

17 **移除工具销子**
请养成在接通工具之前先检查销子和调整扳手是否已从工具上移除的习惯

18 **避免无心地启动**
请勿将手指放在开关上搬动已插入电源的工具。当插入电源时请确认开关已关闭

19 **户外使用扩展电线**
当工具在户外使用时，仅使用专用于户外的并有相关标记的扩展电线

20 **留心**
注意您正在做甚么，运用常识和请勿在您疲劳时操作工具

21 **检查已损坏的部件**
在您使用工具之前，请总是仔细检查防护装置和其它部件以决定它们是否适合操作和是否执行它们的预期功能。检查移动部件的调准，联结和部件的破损。请检查所有部件是否正确安装和其它可能影响它们操作的条件，已损坏或有缺陷的防护装置，开关和其它部件，应请具有资格的人适当地维修或更换，若开关不能接通或断开，请勿使用此工具

22 **警告！**请依照这些安全指示和特定工具所预设的的用法来使用工具和它的辅件。重视工作条件和所要执行的工作。将此工具用于与那些通常所期望的，由特定工具执行的所不同的操作，可能导致危险的情况发生

23 **由具有资格的人维修此工具**
此电动工具是依照相关的安全规则而制造。维修只能由具有资格人使用原厂备件来执行，否则将对用户造成相当大的危险

SKIL8003pages 16-03-2004 13:46 Pagina 23